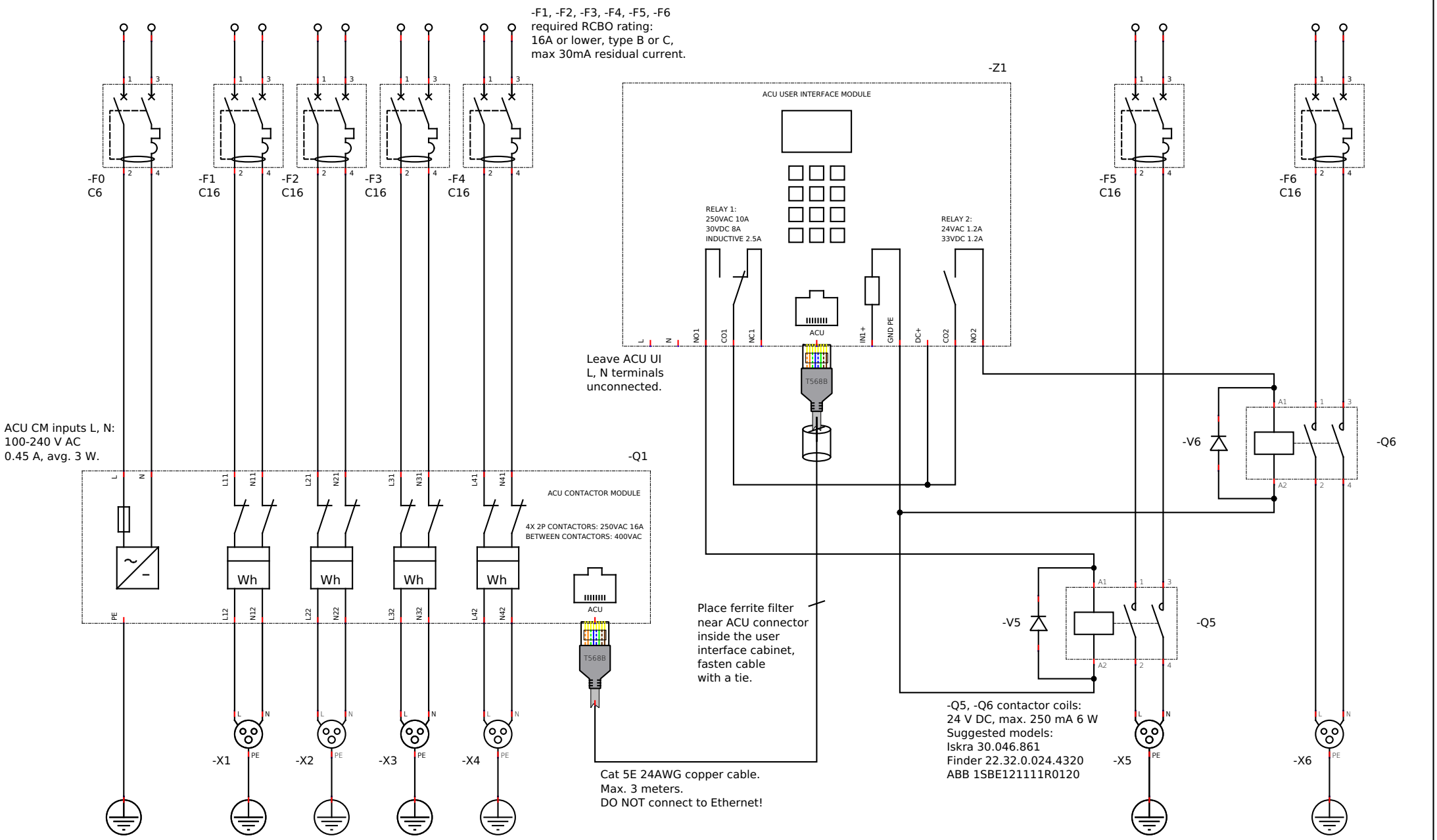

GOMARINA	Access Control Unit (ACU) Wiring Diagram	Date: 3/25/22
www.gomarina.com	Power Post with Six 16A Outlets	Chart: P2